STAF Linear Guide

General Catalog

One Profile For All.

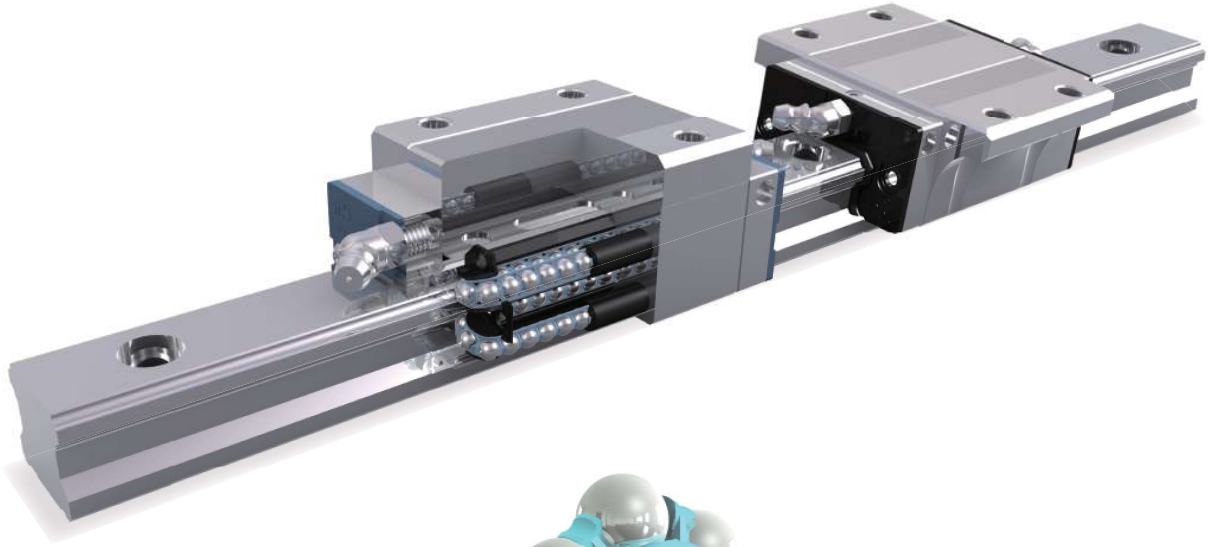

High Accuracy
Low Noise
Smooth Running

Website

Facebook

OME Technology Co.,Ltd.

Low Assembly / Squared Blocks

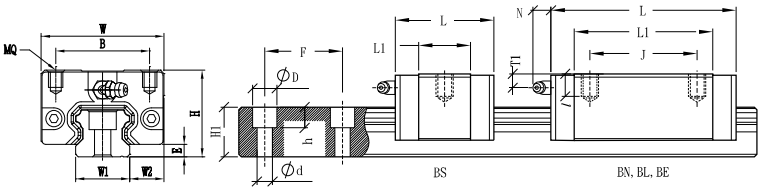

Model	Assembly-mm				Block-mm									Rail-mm						Rating load-kN				Static moment - kN·m			Block	Rail
	H	W	W2	E	L	B	J	MQ	l	L1	Oil H	T1	N	W1	H1	F	d	D	h	C-BGX	C-BGC	C0-BGX	C0-BGC	M_X	M_Y	M_Z	kg	kg/m
S15BS	24	34	9.5	3.3	40.6	26		M4	4.8	22.2	M4X0.7	5.5	(5.7)	15	13.0	60	4.5	7.5	5.5	6.9	5.7	10.8	9.8	0.068	0.032	0.032	0.10	1.28
S15BN	24	34	9.5	3.3	58.6	26	26	M4	4.8	40.2	M4X0.7	5.5	(5.7)	15	13.0	60	4.5	7.5	5.5	13.0	11.5	21.6	19.6	0.136	0.117	0.117	0.17	1.28
S15BL	24	34	9.5	3.3	66.1	26	26	M4	4.8	47.7	M4X0.7	5.5	(5.7)	15	13.0	60	4.5	7.5	5.5	14.1	13.9	26.1	23.7	0.164	0.169	0.169	0.18	1.28
S20BS	28	42	11.0	4.5	49.1	32		M5	5.5	27.5	M6X1.0	5.1	(12.3)	20	16.3	60	6.0	9.5	8.5	11.1	9.1	17.3	15.7	0.146	0.064	0.064	0.17	2.15
S20BN	28	42	11.0	4.5	70.1	32	32	M5	5.5	48.5	M6X1.0	5.1	(12.3)	20	16.3	60	6.0	9.5	8.5	21.5	17.7	33.6	30.5	0.285	0.220	0.220	0.26	2.15
S25BS	33	48	12.5	5.8	54.0	35		M6	6.8	32.3	M6X1.0	7.2	(12.2)	23	19.2	60	7.0	11.0	9.0	15.5	12.7	23.1	21	0.225	0.101	0.101	0.21	2.88
S25BN	33	48	12.5	5.8	79.2	35	35	M6	6.8	57.5	M6X1.0	7.2	(12.2)	23	19.2	60	7.0	11.0	9.0	28.1	24.8	45.2	41.1	0.440	0.352	0.352	0.38	2.88
X25BN	36	48	12.5	5.8	79.2	35	35	M6	9.0	57.5	M6X1.0	10.2	(12.2)	23	19.2	60	7.0	11.0	9.0	28.1	24.8	45.2	41.1	0.440	0.352	0.352	0.40	2.88
X25BL	36	48	12.5	5.8	93.9	35	35	M6	9.0	72.2	M6X1.0	10.2	(12.2)	23	19.2	60	7.0	11.0	9.0	33.7	31.9	58.1	52.8	0.566	0.568	0.568	0.54	2.88
X25BE	36	48	12.5	5.8	108.6	35	50	M6	9.0	86.9	M6X1.0	10.2	(12.2)	23	19.2	60	7.0	11.0	9.0	38.0	36.0	69.6	63.3	0.679	0.819	0.819	0.67	2.88
S30BS	42	60	16.0	7.0	64.2	40		M8	10.0	37.2	M6X1.0	10	(11.7)	28	22.8	80	9.0	14.0	12.0	22.1	18.2	29.7	27	0.350	0.150	0.150	0.50	4.45
S30BN	42	60	16.0	7.0	94.8	40	40	M8	10.0	67.8	M6X1.0	10	(11.7)	28	22.8	80	9.0	14.0	12.0	41.6	36.7	60.1	54.6	0.706	0.551	0.551	0.80	4.45
S30BL	42	60	16.0	7.0	105.0	40	40	M8	10.0	78.0	M6X1.0	10	(11.7)	28	22.8	80	9.0	14.0	12.0	48.1	47.5	77.8	70.7	0.915	0.821	0.821	0.94	4.45
S30BE	42	60	16.0	7.0	130.5	40	60	M8	10.0	103.5	M6X1.0	10	(11.7)	28	22.8	80	9.0	14.0	12.0	57.9	52.9	95.4	86.7	1.122	1.336	1.336	1.16	4.45
S35BS	48	70	18.0	7.5	75.5	50		M8	10.0	44.5	M6X1.0	11.5	(11.5)	34	26.0	80	9.0	14.0	12.0	31.8	26.2	44.8	40.7	0.643	0.269	0.269	0.80	6.25
S35BN	48	70	18.0	7.5	111.5	50	50	M8	10.0	80.5	M6X1.0	11.5	(11.5)	34	26.0	80	9.0	14.0	12.0	59.4	52.3	89.2	81.1	1.282	0.972	0.972	1.20	6.25
S35BL	48	70	18.0	7.5	123.5	50	50	M8	10.0	92.5	M6X1.0	11.5	(11.5)	34	26.0	80	9.0	14.0	12.0	68.8	65.4	111.5	101.4	1.602	1.396	1.396	1.40	6.25
S35BE	48	70	18.0	7.5	153.5	50	72	M8	10.0	122.5	M6X1.0	11.5	(11.5)	34	26.0	80	9.0	14.0	12.0	81.6	71.9	137.8	125.3	1.981	2.286	2.286	1.84	6.25
S45BN	60	86	20.5	8.9	129.0	60	60	M10	15.5	94.0	M8X1.25	14.4	(10.8)	45	31.1	105	14.0	20.0	17.0	81.2	71.6	119.8	108.9	2.300	1.524	1.524	1.64	9.60
S45BL	60	86	20.5	8.9	145.0	60	60	M10	15.5	110.0	M8X1.25	14.4	(10.8)	45	31.1	105	14.0	20.0	17.0	89.7	85.1	142.5	129.5	2.736	2.122	2.122	1.93	9.60
S45BE	60	86	20.5	8.9	174.0	60	80	M10	15.5	139.0	M8X1.25	14.4	(10.8)	45	31.1	105	14.0	20.0	17.0	103.6	98.4	179.6	163.3	3.449	3.379	3.379	2.42	9.60
S55BN	70	100	23.5	12.7	155.0	75	75	M12	18.0	116.0	M8X1.25	14.0	(10.8)	53	38.0	120	16.0	23.0	20.0	104.7	86.2	146.7	133.4	3.303	2.304	2.304	2.67	13.80
S55BL	70	100	23.5	12.7	193.0	75	75	M12	18.0	154.0	M8X1.25	14.0	(10.8)	53	38.0	120	16.0	23.0	20.0	131.9	116.3	196.8	178.9	4.428	4.101	4.101	3.57	13.80
S55BE	70	100	23.5	12.7	210.0	75	95	M12	18.0	171.0	M8X1.25	14.0	(10.8)	53	38.0	120	16.0	23.0	20.0	166.0	157.7	279.0	253.6	6.279	6.458	6.458	3.97	13.80

High Assembly / Squared Blocks

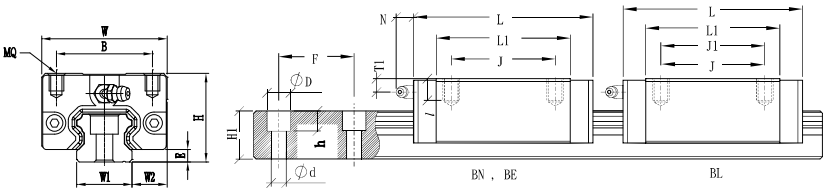

※ BL : BGX → J1 ; BGC → J

Model	Assembly-mm				Block-mm										Rail-mm						Rating load-kN				Static moment - kN·m			Block	Rail
	H	W	W2	E	L	B	J	J1	MQ	l	L1	Oil H	T1	N	W1	H1	F	d	D	h	C-BGX	C-BGC	C0-BGX	C0-BGC	M_x	M_Y	M_Z	kg	kg/m
H15BN	28	34	9.5	3.3	58.6	26	26		M4	6.0	40.2	M4X0.7	9.5	(5.7)	15	13.0	60	4.5	7.5	5.5	13.0	11.5	21.6	19.6	0.136	0.117	0.117	0.19	1.28
H20BN	30	44	12.0	4.5	70.1	32	36		M5	6.5	48.5	M6X1	7.1	(12.3)	20	16.3	60	6.0	9.5	8.5	21.5	17.7	33.6	30.5	0.285	0.220	0.220	0.31	2.15
※ H20BL	30	44	12.0	4.5	82.9	32	36	50	M5	6.5	61.3	M6X1	7.1	(12.3)	20	16.3	60	6.0	9.5	8.5	26.0	23.0	43.5	39.5	0.369	0.361	0.361	0.36	2.15
H20BE	30	44	12.0	4.5	98.1	32	50		M5	6.5	76.5	M6X1	7.1	(12.3)	20	16.3	60	6.0	9.5	8.5	30.9	27.3	53.8	48.9	0.456	0.557	0.557	0.47	2.15
H25BN	40	48	12.5	5.8	79.2	35	35		M6	9.0	57.5	M6X1	14.2	(12.2)	23	19.2	60	7.0	11.0	9.0	28.1	24.8	45.2	41.1	0.440	0.352	0.352	0.45	2.88
※ H25BL	40	48	12.5	5.8	93.9	35	35	50	M6	9.0	72.2	M6X1	14.2	(12.2)	23	19.2	60	7.0	11.0	9.0	33.7	31.9	58.1	52.8	0.566	0.568	0.568	0.66	2.88
H25BE	40	48	12.5	5.8	108.6	35	50		M6	9.0	86.9	M6X1	14.2	(12.2)	23	19.2	60	7.0	11.0	9.0	38.0	36.0	69.6	63.3	0.679	0.819	0.819	0.80	2.88
H30BN	45	60	16.0	7.0	94.8	40	40		M8	12.0	67.8	M6X1	13	(11.7)	28	22.8	80	9.0	14.0	12.0	41.6	36.7	60.1	54.6	0.706	0.551	0.551	0.91	4.45
※ H30BL	45	60	16.0	7.0	105.0	40	40	60	M8	12.0	78.0	M6X1	13	(11.7)	28	22.8	80	9.0	14.0	12.0	48.1	47.5	77.8	70.7	0.915	0.821	0.821	1.04	4.45
H30BE	45	60	16.0	7.0	130.5	40	60		M8	12.0	103.5	M6X1	13	(11.7)	28	22.8	80	9.0	14.0	12.0	57.9	52.9	95.4	86.7	1.122	1.336	1.336	1.36	4.45
H35BN	55	70	18.0	7.5	111.5	50	50		M8	12.0	80.5	M6X1	18.5	(11.5)	34	26.0	80	9.0	14.0	12.0	59.4	52.3	89.2	81.1	1.282	0.972	0.972	1.50	6.25
※ H35BL	55	70	18.0	7.5	123.5	50	50	72	M8	12.0	92.5	M6X1	18.5	(11.5)	34	26.0	80	9.0	14.0	12.0	68.8	65.4	111.5	101.4	1.602	1.396	1.396	1.80	6.25
H35BE	55	70	18.0	7.5	153.5	50	72		M8	12.0	122.5	M6X1	18.5	(11.5)	34	26.0	80	9.0	14.0	12.0	81.6	71.9	137.8	125.3	1.981	2.286	2.286	2.34	6.25
H45BN	70	86	20.5	8.9	129.0	60	60		M10	18.0	94.0	M8X1.25	24.4	(10.8)	45	31.1	105	14.0	20.0	17.0	81.2	71.6	119.8	108.9	2.300	1.524	1.524	2.28	9.60
※ H45BL	70	86	20.5	8.9	145.0	60	60	80	M10	18.0	110.0	M8X1.25	24.4	(10.8)	45	31.1	105	14.0	20.0	17.0	89.7	85.1	142.5	129.5	2.736	2.122	2.122	2.67	9.60
H45BE	70	86	20.5	8.9	174.0	60	80		M10	18.0	139.0	M8X1.25	24.4	(10.8)	45	31.1	105	14.0	20.0	17.0	103.6	98.4	179.6	163.3	3.449	3.379	3.379	3.35	9.60
H55BN	80	100	23.5	12.7	155.0	75	75		M12	22.0	116.0	M8X1.25	24.0	(10.8)	53	38.0	120	16.0	23.0	20.0	104.7	86.2	146.7	133.4	3.303	2.304	2.304	3.42	13.80
※ H55BL	80	100	23.5	12.7	193.0	75	75	95	M12	22.0	154.0	M8X1.25	24.0	(10.8)	53	38.0	120	16.0	23.0	20.0	131.9	116.3	196.8	178.9	4.428	4.101	4.101	4.57	13.80
H55BE	80	100	23.5	12.7	210.0	75	95		M12	22.0	171.0	M8X1.25	24.0	(10.8)	53	38.0	120	16.0	23.0	20.0	166.0	157.7	279.0	253.6	6.279	6.458	6.458	5.08	13.80

Flanged Blocks

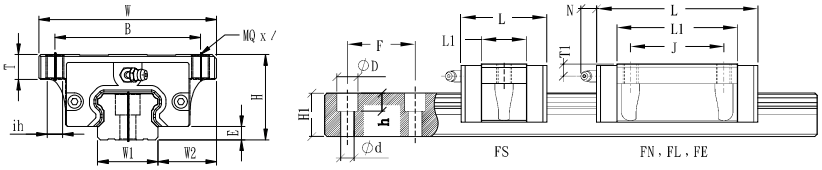

◎ PLEASE CONTACT OME/ STAF FOR MORE INFORMATION.

Model	Assembly-mm				Block-mm											Rail-mm						Rating load-kN				Static moment - kN·m			Block	Rail
	H	W	W2	E	L	B	J	MQ	/	ih	T	L1	Oil H	T1	N	W1	H1	F	d	D	h	C-BGX	C-BGC	C0-BGX	C0-BGC	M_X	M_Y	M_Z	kg	kg/m
H15FN	24	47	16.0	3.3	58.6	38	30	M5	7	4.4	7.5	40.2	M4X0.7	5.5	(5.7)	15	13.0	60	4.5	7.5	5.5	13.0	11.5	21.6	19.6	0.136	0.117	0.117	0.21	1.28
H15FL	24	47	16.0	3.3	66.1	38	30	M5	7	4.4	7.5	47.7	M4X0.7	5.5	(5.7)	15	13.0	60	4.5	7.5	5.5	14.1	13.9	26.1	23.7	0.164	0.169	0.169	0.23	1.28
◎ S15FS	24	52	18.5	3.3	40.6	41		M5	7	4.4	7.5	22.2	M4X0.7	5.5	(5.7)	15	13.0	60	4.5	7.5	5.5	6.9	5.7	10.8	9.8	0.068	0.032	0.032	0.12	1.28
S15FN	24	52	18.5	3.3	58.6	41	26	M5	7	4.4	7.5	40.2	M4X0.7	5.5	(5.7)	15	13.0	60	4.5	7.5	5.5	13.0	11.5	21.6	19.6	0.136	0.117	0.117	0.19	1.28
H20FN	30	63	21.5	4.5	70.1	53	40	M6	8.5	5.4	9.0	48.5	M6X1	7.1	(12.3)	20	16.3	60	6.0	9.5	8.5	21.5	17.7	33.6	30.5	0.285	0.220	0.220	0.40	2.15
H20FL	30	63	21.5	4.5	82.9	53	40	M6	8.5	5.4	9.0	61.3	M6X1	7.1	(12.3)	20	16.3	60	6.0	9.5	8.5	26.0	23.0	43.5	39.5	0.369	0.361	0.361	0.46	2.15
H20FE	30	63	21.5	4.5	98.1	53	40	M6	8.5	5.4	9.0	76.5	M6X1	7.1	(12.3)	20	16.3	60	6.0	9.5	8.5	30.9	27.3	53.8	48.9	0.456	0.557	0.557	0.61	2.15
◎ S20FS	28	59	19.5	4.5	49.1	49		M6	6.5	5.4	7.0	27.5	M6X1	5.1	(12.3)	20	16.3	60	6.0	9.5	8.5	11.1	9.1	17.3	15.7	0.225	0.101	0.101	0.18	2.15
S20FN	28	59	19.5	4.5	70.1	49	32	M6	6.5	5.4	7.0	48.5	M6X1	5.1	(12.3)	20	16.3	60	6.0	9.5	8.5	21.5	17.7	33.6	30.5	0.285	0.220	0.220	0.31	2.15
H25FN	36	70	23.5	5.8	79.2	57	45	M8	9.6	6.8	10.1	57.5	M6X1	10.2	(12.2)	23	19.2	60	7.0	11.0	9.0	28.1	24.8	45.2	41.1	0.440	0.352	0.352	0.57	2.88
H25FL	36	70	23.5	5.8	93.9	57	45	M8	9.6	6.8	10.1	72.2	M6X1	10.2	(12.2)	23	19.2	60	7.0	11.0	9.0	33.7	31.9	58.1	52.8	0.566	0.568	0.568	0.72	2.88
H25FE	36	70	23.5	5.8	108.6	57	45	M8	9.6	6.8	10.1	86.9	M6X1	10.2	(12.2)	23	19.2	60	7.0	11.0	9.0	38.0	36.0	69.6	63.3	0.679	0.819	0.819	0.89	2.88
◎ S25FS	33	73	25.0	5.8	54.0	60		M8	6.6	6.8	7.1	32.3	M6X1	7.2	(12.3)	23	19.2	60	7.0	11.0	9.0	15.5	12.7	23.1	21.0	0.225	0.101	0.101	0.33	2.88
S25FN	33	73	25.0	5.8	79.2	60	35	M8	6.6	6.8	7.1	57.5	M6X1	7.2	(12.3)	23	19.2	60	7.0	11.0	9.0	28.1	24.8	45.2	41.1	0.440	0.352	0.352	0.50	2.88
◎ H30FS	42	90	31.0	7.0	64.2	72		M10	11.5	8.6	12.0	37.2	M6X1	10	(11.7)	28	22.8	80	9.0	14.0	12.0	22.1	18.2	29.7	27.0	0.350	0.150	0.150	0.80	4.45
H30FN	42	90	31.0	7.0	94.8	72	52	M10	11.5	8.6	12.0	67.8	M6X1	10	(11.7)	28	22.8	80	9.0	14.0	12.0	41.6	36.7	60.1	54.6	0.706	0.551	0.551	1.10	4.45
H30FL	42	90	31.0	7.0	105.0	72	52	M10	11.5	8.6	12.0	78.0	M6X1	10	(11.7)	28	22.8	80	9.0	14.0	12.0	48.1	47.5	77.8	70.7	0.915	0.821	0.821	1.34	4.45
H30FE	42	90	31.0	7.0	130.5	72	52	M10	11.5	8.6	12.0	103.5	M6X1	10	(11.7)	28	22.8	80	9.0	14.0	12.0	57.9	52.9	95.4	86.7	1.122	1.336	1.336	1.66	4.45
◎ H35FS	48	100	33.0	7.5	75.5	82		M10	13.5	8.6	14.0	44.5	M6X1	11.5	(11.5)	34	26.0	80	9.0	14.0	12.0	31.8	26.2	44.8	40.7	0.643	0.269	0.269	1.00	6.25
H35FN	48	100	33.0	7.5	111.5	82	62	M10	13.5	8.6	14.0	80.5	M6X1	11.5	(11.5)	34	26.0	80	9.0	14.0	12.0	59.4	52.3	89.2	81.1	1.282	0.972	0.972	1.50	6.25
H35FL	48	100	33.0	7.5	123.5	82	62	M10	13.5	8.6	14.0	92.5	M6X1	11.5	(11.5)	34	26.0	80	9.0	14.0	12.0	68.8	65.4	111.5	101.4	1.602	1.396	1.396	1.90	6.25
H35FE	48	100	33.0	7.5	153.5	82	62	M10	13.5	8.6	14.0	122.5	M6X1	11.5	(11.5)	34	26.0	80	9.0	14.0	12.0	81.6	71.9	137.8	125.3	1.981	2.286	2.286	2.54	6.25
H45FL	60	120	37.5	8.9	145.0	100	80	M12	15.5	10.6	16.0	110.0	M8X1.25	14.4	(10.8)	45	31.1	105	14.0	20.0	17.0	89.7	85.1	142.5	129.5	2.736	2.122	2.122	2.68	9.60
H45FE	60	120	37.5	8.9	174.0	100	80	M12	15.5	10.6	16.0	139.0	M8X1.25	14.4	(10.8)	45	31.1	105	14.0	20.0	17.0	103.6	98.4	179.6	163.3	3.449	3.379	3.379	3.42	9.60
H55FN	70	140	43.5	12.7	155.0	116	95	M14	18.5	12.6	19.0	116.0	M8X1.25	14.0	(10.8)	53	38.0	120	16.0	23.0	20.0	104.7	86.2	146.7	133.4	3.303	2.304	2.304	3.44	13.80
H55FL	70	140	43.5	12.7	193.0	116	95	M14	18.5	12.6	19.0	154.0	M8X1.25	14.0	(10.8)	53	38.0	120	16.0	23.0	20.0	131.9	116.3	196.8	178.9	4.428	4.101	4.101	4.63	13.80
H55FE	70	140	43.5	12.7	210.0	116	95	M14	18.5	12.6	19.0	171.0	M8X1.25	14.0	(10.8)	53	38.0	120	16.0	23.0	20.0	166.0	157.7	279.0	253.6	6.279	6.458	6.458	5.16	13.80

- Raceway configuration has good self-adjustment capability and permits wider installation tolerances

- Optimized lubricant circulation system provides stable motion performance

- Caged & Non-caged carriages are sharing one profile rail

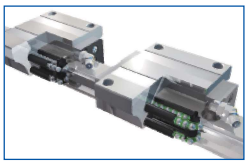

Running Smoothness Comparison

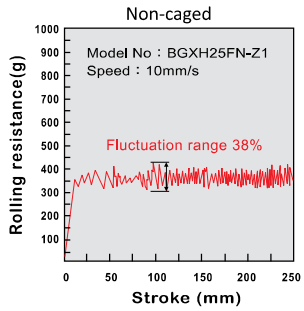

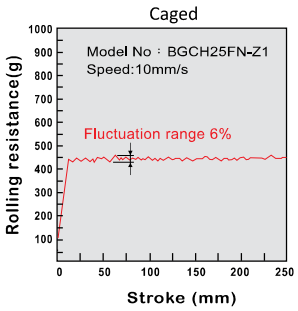

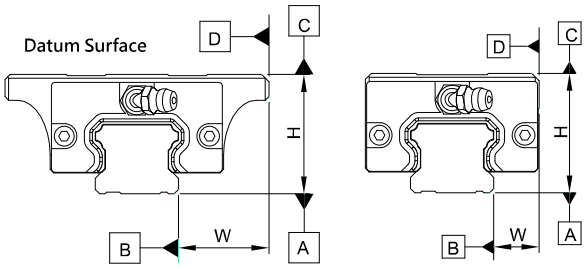

Precision Grades

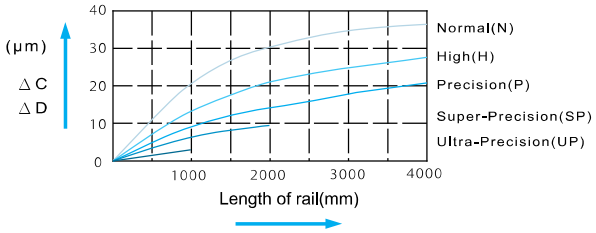

Fig. 1-1 BG rail length and running parallelism

Unit : mm

ITEM \ GRADE	Normal(N)	High(H)	Precision(P)	Super-Precision (SP)	Ultra-Precision (UP)
Tolerance of height (H)	±0.1	±0.04	0 -0.04	0 -0.02	0 -0.01
Tolerance of width (W)	±0.1	±0.04	0 -0.04	0 -0.02	0 -0.01
Difference of heights (△H)	0.03	0.02	0.01	0.005	0.003
Difference of widths (△W)	0.03	0.02	0.01	0.005	0.003
Running parallelism of Block surface C with respect to surface A	△C Refer to Fig. 1-1				
Running parallelism of Block surface D with respect to surface B	△D Refer to Fig. 1-1				

High accuracy	Low noise
Low friction	Low vibration

Dustproof Accessories

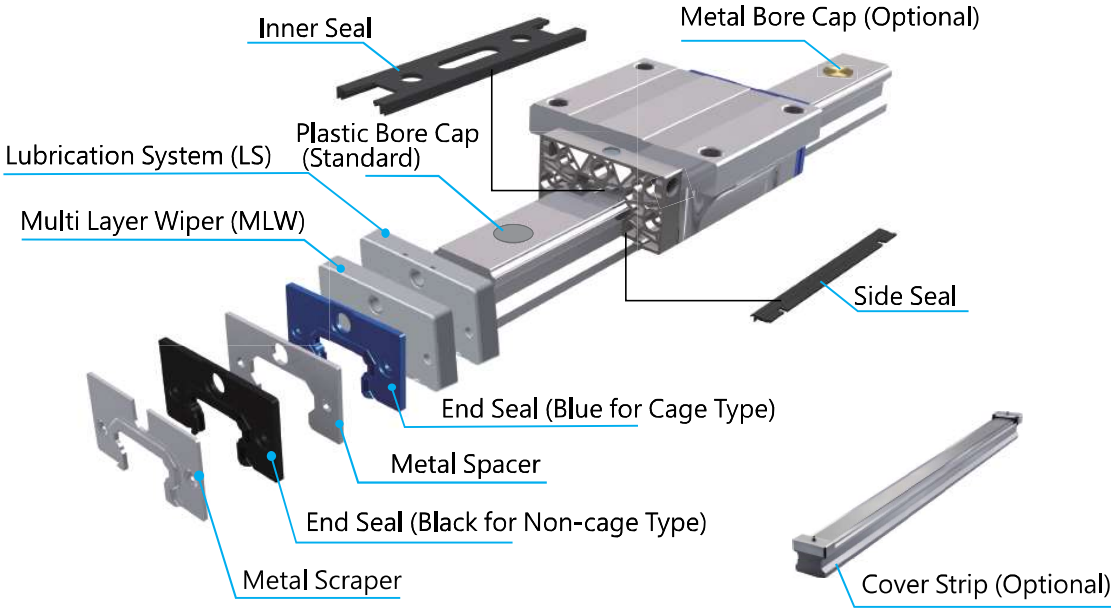

Seal Combination

Standard End Seal Combination		Low Friction End Seals (LFS) Combination		Reinforced Side Seals (RSS) Combination		Lubrication System (LS)		Additional	
Code	Content	Code	Content	Code	Content	Code	Content	Code	Content
--	End Seal +Side Seal	AL	LFS +Side Seal	AB	End Seal +RSS	A	Self-Lubrication	M	Multiple-Layer Wiper
UU	End Seal	UL	LFS						
SS	End Seal +Side Seal +Inner Seal	SL	LFS +Side Seal +Inner Seal	SB	End Seal +RSS +Inner Seal				
DD	Double End Seal +Side Seal	DL	Double LFS +Side Seal	DB	Double End Seal +RSS				
EE	Double End Seal +Side Seal +Inner Seal	EL	Double LFS +Side Seal +Inner Seal	EB	Double End Seal +RSS +Inner Seal				
FF	End Seal +Side Seal +Inner Seal +Metal Scraper	FL	LFS +Side Seal +Inner Seal +Metal Scraper	FB	End Seal +RSS +Inner Seal +Metal Scraper				
GG	Double End Seal +Side Seal +Inner Seal +Metal Scraper	GL	Double LFS +Side Seal +Inner Seal +Metal Scraper	GB	Double End Seal +RSS +Inner Seal +Metal Scraper				
ZZ	End Seal +Side Seal +Metal Scraper	ZL	LFS +Side Seal +Metal Scraper	ZB	End Seal +RSS +Metal Scraper				
KK	Double End Seal +Side Seal +Metal Scraper	KL	Double LFS +Side Seal +Metal Scraper	KB	Double End Seal +RSS +Metal Scraper				

End Seals

Standard End Seal

Double-lipped design for an outstanding dust-proof performance.

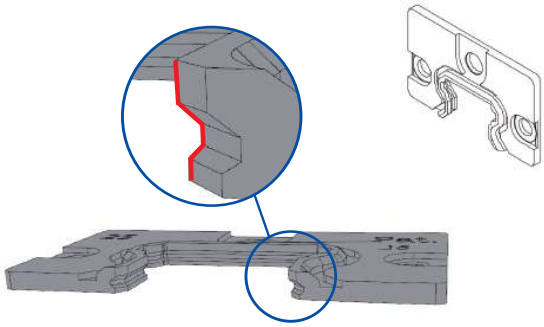

Low Friction End Seal - LFS

Single-lipped design for lighter friction force while possesses good dust-proof performance.

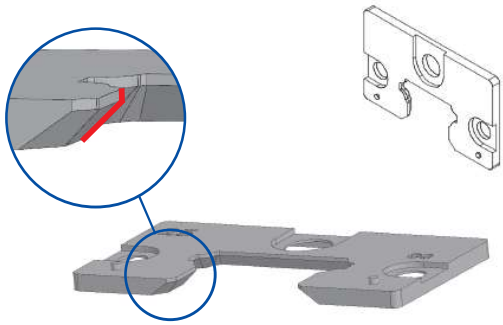

Side Seals

Standard Side Seal

Our standard side seal can prevent metal scraps, wood chips, dirt and so on from entering the carriage from bottom. Each STAF carriage is equipped with a pair as standard.

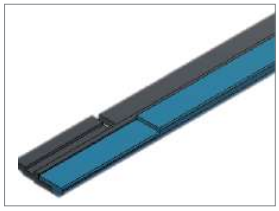

Reinforced Side Seal - RSS

STAF reinforced side seal is composed of multiple materials. This optional side seal can reduce the risk of foreign matter intrusion even further than standard one.

Multi-Layer Wiper (MLW)

STAF Multi-Layer Wiper is an additional seal option for our linear guide users. This accessory consists of three layers of high density sponge, and is an ideal seal option if thin and tiny particles are considered to be the major contamination in your working environment.

Lubrication System (LS)

STAF Lubrication System continuously provides lubricant in appropriate amount onto the raceway. The amount of lubricant is controlled by capillary phenomenon, which would significantly extend the maintenance intervals and is Eco-friendly as surplus lubricant can be absorbed back and reused.

Bellow

Single carriage

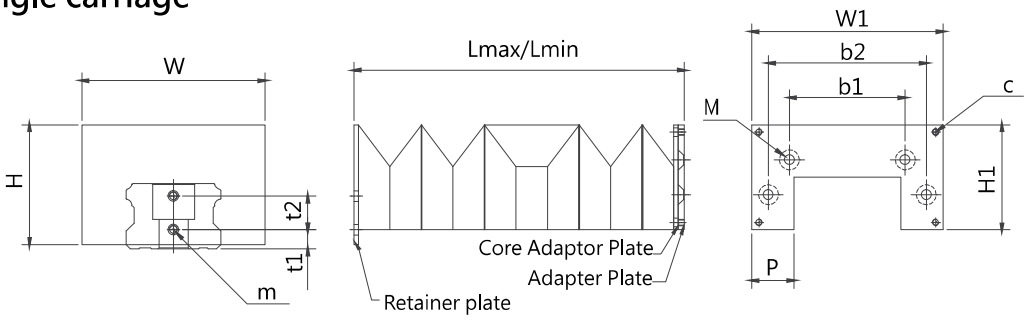

Multiple carriages

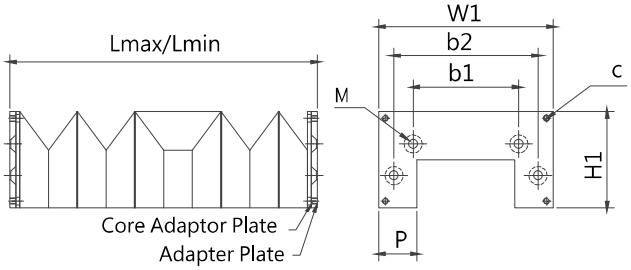

L max: Max. Elongation Length
L min: Min. Compression Length
ST (Stroke) = Lmax – Lmin

Dimensions

Unit :mm

Size	Adapter Plate Dimension(mm)									Screw Specification		
	W	H	W1	H1	P	b1	b2	t1	t2	(M)Flat Head Screws	m	c
15	36	24	38	20.5	10	18.4	27	3	7.5	M2.5x12L	M3x6L	M3x5L
20	42	27.5	44	23	10	24.6	34.5	3.7	10	M3x12L	M3x6L	M3x5L
25	48	30	48	28	10	28	40.2	6	10	M3x14L	M3x6L	M3x5L
30	70	38	62	34	15	34	50.5	6.8	12	M3x16L	M4x8L	M3x5L
35	70	43	72	40	15	43	60	9	12	M4x18L	M4x8L	M3x5L
45	87	57	91	50	20	55	75	9.1	16	M4x18L	M4x8L	M3x5L
55	100	60	104	55	20	64	88	15	16	M4x25L	M4x8L	M3x5L

Stroke Length

Unit :mm

Lmax(mm)	500	800	1000	1200	1500
Lmin(mm)	160	235	285	335	410

◎ PLEASE CONTACT OME/ STAF FOR MORE INFORMATION.

Single carriage

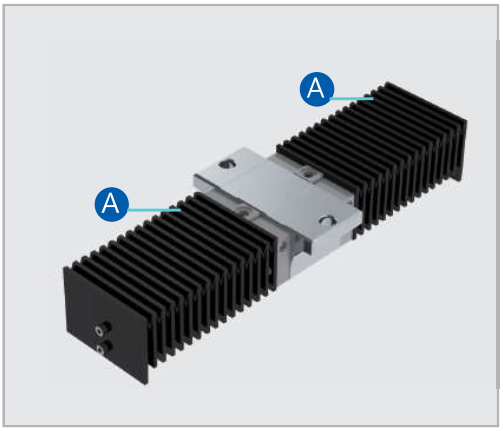

Multiple carriages

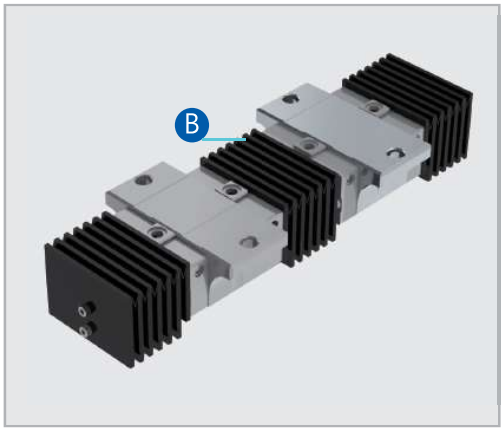

Product Codes

BGC – 15 – A – 01000 – 00285

Carriage type
BGX: Non-caged
BGC: Caged

Size: **15, 20, 25, 30, 35, 45, 55**

Locking Method:
A: Single carriage **B**: Multiple carriages

L max

L min

Product Codes

BGC H 25 BN - 2 - UUAM - L 1500 - P - Z1 - II R 1

Carriage type
BGX: Non-caged
BGC: Caged

Assembly height
H: High assembly
S: Low assembly
X: Special assembly

Size: **15, 20, 25, 30, 35, 45, 55**

Carriage design
B: Block (Squared), **F:** Flange

Carriage length
S: Short, **N:** Standard, **L:** Long
E: Extra-long

Number of carriages

Seal combination (reference to the seal combination table)

Rail mounting type
L: Counterbored holes (standard)
C: Bottom tapped holes
J: Jointed rails (counterbored holes)
D: Jointed rails (bottom tapped holes)
X: Customized

Rail length (mm)

Precision grades
N: Normal, **H:** High, **P:** Precise, **SP:** Super Precise, **UP:** Ultra Precise

Preload
ZF: With clearance, **Z0:** No preload
Z1: Light preload, **Z2:** Medium preload, **Z3:** Heavy preload

Number of parallel rails

Surface treatment (unavailable for precision grades SP/UP)
Leave blank if surface treatment isn't required
D: Trivalent chromium, **R:** Fluoride chromium, **K:** Black chromium
N: Nickel, **B:** Black oxide, **P:** Phosphate

Treated parts
1: Rail only
2: Carriage only
3: Rail and carriage

certificated by SGS with ISO9001
Regarding the newest product and certification information, please refer to the official website.